VALVOLE

VALVOLE REGOLAZIONE PRESSIONE CON BY-PASS ESTERNO
UNLOADER VALVES WITH EXTERNAL BY-PASS
RÉGULATEURS DE PRESSION SÉPARÉS DE LA CULASSE
VÁLVULAS DE REGULACIÓN DE PRESIÓN

TEMPERATURA MAX: 60°C - 140°F
MAX TEMPERATURE: 60°C - 140°F
TEMPÉRATURE MAXI: 60°C - 140°F
TEMPERATURA MÁX: 60°C - 140°F

VD 140 - VD 200 - VD 280											
	CODICE CODE	Modello Model	Pressione Max Max Pressure		Portata - Flow		Attacco pompa Port size	Uscita Outlet	Scarico By-pass	Peso - Weight	
			bar	psi	l/min	GPM				Kg	lbs
GREEN COLOR	05.9899.97.3	VD 140	140	2000	30	8.0	3/8 BSP - M	3/8 BSP - M	3/8 BSP - M	0.73	1.6
	05.9903.97.3	VD 200	210	3000	30	8.0	3/8 BSP - M	3/8 BSP - M	3/8 BSP - M	0.73	1.6
	05.9955.97.3	VD 280	280	4000	30	8.0	3/8 BSP - M	3/8 BSP - M	3/8 BSP - M	0.73	1.6

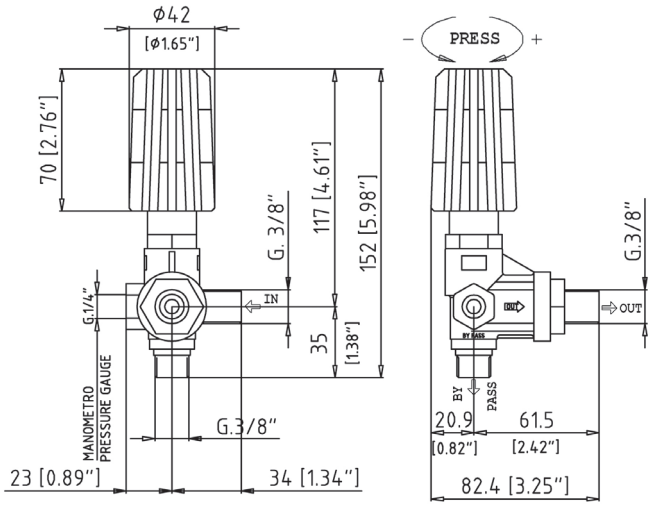
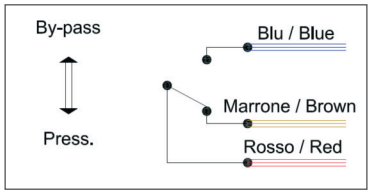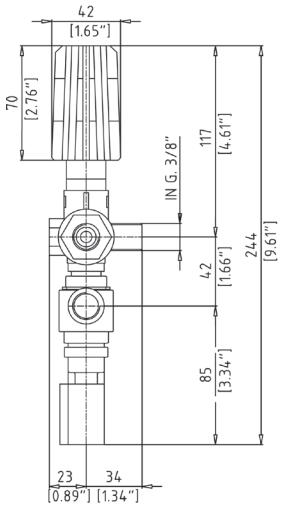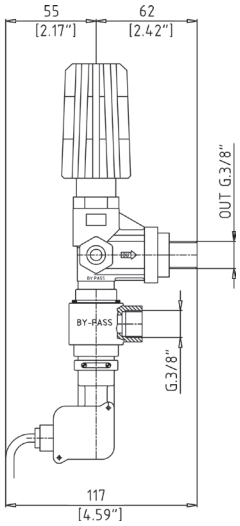
VD Con Microinterruttore With Micro-Switch											
	CODICE CODE	Modello Model	Pressione Max Max Pressure		Portata - Flow		Attacco pompa Port size	Uscita Outlet	Scarico By-pass	Peso - Weight	
			bar	psi	l/min	GPM				Kg	lbs
GREEN COLOR	05.8762.97.3	VD 140 MICRO-SWITCH	140	2000	30	8.0	3/8 BSP - M	3/8 BSP - M	3/8 BSP - F	0.95	2.1
	05.8763.97.3	VD 200 MICRO-SWITCH	210	3000	30	8.0	3/8 BSP - M	3/8 BSP - M	3/8 BSP - F	0.95	2.1
	05.8764.97.3	VD 280 MICRO-SWITCH	280	4000	30	8.0	3/8 BSP - M	3/8 BSP - M	3/8 BSP - F	0.95	2.1
Corrente Max: 2 A - Tensione Max: 250 V - Max Curr. Strength: 2 A - Max Voltage: 250 V