CX Series

CX 170

165 l/m
43.6 USGPM

max 70 BAR
1015 P.S.I.

APPLICAZIONI - APPLICATIONS

- **ATOMIZZATORI** ATOMIZERS
- **CLEANING** CLEANING

SPECIAL TRADEMARK

- EL EASYlube™
- IS INTELLIseal™
- SC SMARTcase™
- LTr LIFETIMErod™

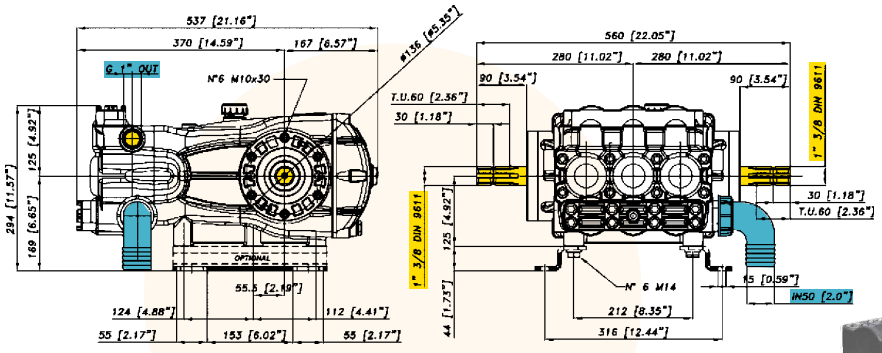

P

CARATTERISTICHE TECNICHE SPECIFICATIONS	550 g/min. 550 R.P.M.	
Potenza - Power	**22,0 KW**	29.4 HP
Peso - Weight	**55 Kg**	121 lb
IN	**50 mm**	2" in
Pressione Min - Min Pressure	**-0,15 BAR**	- 2.17 P.S.I.
	-0,3 BAR (servizio discontinuo)	-0.435 P.S.I. (discontinuous service)
Pressione Max - Max Pressure	**1 BAR**	14.5 P.S.I.
OUT	**G 1**	
Max. Temperatura - Max. Temperature	**60 °C**	140 °F
Tipo olio - Oil type	**SAE 30**	
Capacità olio - Oil capacity	**6 lt**	1.58 U.S.G.

TABELLA RENDIMENTI
PERFORMANCE CHART

g/min R.P.M.	400		450		500		550	
BAR P.S.I.	**L/min** USGPM	**KW** HP	**L/min** USGPM	**KW** HP	**L/min** USGPM	**KW** HP	**L/min** USGPM	**KW** HP
2 29	**120,0** 31,7	**0,5** 0,6	**135,0** 35,7	**0,5** 0,7	**150,0** 39,6	**0,6** 0,8	**165,0** 43,6	**0,6** 0,9
30 435	**118,5** 31,3	**7,0** 9,3	**133,4** 35,2	**7,9** 10,5	**148,2** 39,1	**8,7** 11,7	**163,0** 43,1	**9,6** 12,8
50 725	**117,8** 31,1	**11,6** 15,5	**132,5** 35,0	**13,0** 17,4	**147,3** 38,9	**14,5** 19,3	**162,0** 42,8	**15,9** 21,3
70 1015	**116,4** 30,7	**16,0** 21,4	**130,9** 34,6	**18,0** 24,0	**145,5** 38,4	**20,0** 26,7	**160,0** 42,3	**22,0** 29,4

Versioni
Versions

74.1003.97.3 - P

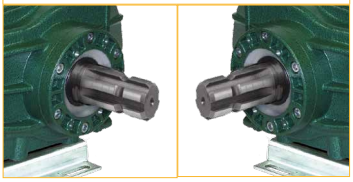

Destro/Right **Sinistro**/Left