CX Series

CX 150

152 l/m
40.2 USGPM

max 70 BAR
1015 P.S.I.

APPLICAZIONI - APPLICATIONS

- **ATOMIZZATORI** ATOMIZERS
- **CLEANING** CLEANING

SPECIAL TRADEMARK

- EL EASYlube™
- Is INTELLIseal™
- Sc SMARTcase™
- LTr LIFETIMErod™

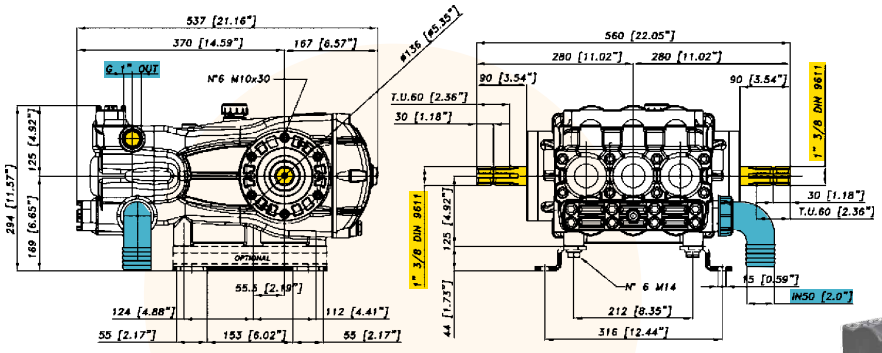

P

CARATTERISTICHE TECNICHE SPECIFICATIONS	550 g/min. 550 R.P.M.	
Potenza - Power	**20,3 KW**	27.2 HP
Peso - Weight	**55 Kg**	121 lb
IN	**50 mm**	2" in
Pressione Min - Min Pressure	**-0,15 BAR**	- 2.17 P.S.I.
	-0,3 BAR (servizio discontinuo)	-0.435 P.S.I. (discontinuous service)
Pressione Max - Max Pressure	**1 BAR**	14.5 P.S.I.
OUT	**G 1**	
Max. Temperatura - Max. Temperature	**60 °C**	140 °F
Tipo olio - Oil type	**SAE 30**	
Capacità olio - Oil capacity	**6 lt**	1.58 U.S.G.

TABELLA RENDIMENTI
PERFORMANCE CHART

g/min R.P.M.	400		450		500		550	
BAR P.S.I.	**L/min** USGPM	**KW** HP	**L/min** USGPM	**KW** HP	**L/min** USGPM	**KW** HP	**L/min** USGPM	**KW** HP
2 29	**110,5** 29,2	**0,4** 0,6	**124,4** 32,9	**0,5** 0,7	**138,2** 36,5	**0,5** 0,7	**152,0** 40,2	**0,6** 0,8
30 435	**109,8** 29,0	**6,5** 8,6	**123,5** 32,6	**7,3** 9,7	**137,3** 36,3	**8,1** 10,8	**151,0** 39,9	**8,9** 11,9
50 725	**108,4** 28,6	**10,6** 14,2	**121,9** 32,2	**12,0** 16,0	**135,5** 35,8	**13,3** 17,8	**149,0** 39,4	**14,6** 19,5
70 1015	**107,6** 28,4	**14,8** 19,8	**121,1** 32,0	**16,6** 22,2	**134,5** 35,5	**18,5** 24,7	**148,0** 39,1	**20,3** 27,2

Versioni
Versions

74.1008.97.3 - P

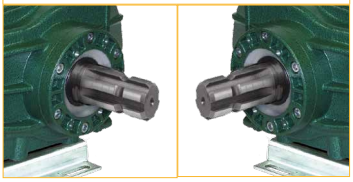

Destro/Right **Sinistro**/Left